FuseBox®

MAIN SWITCH (100A)

NUMBER OF USABLE WAYS	4	7	11	15	21	22	30
PART NUMBER WITH T2 SPD	F2004M	F2007M	F2011M	F2015M	F2021M	F2022M	F2030M
GTIN-13	5060523523863	5060523523870	5060523523887	5060523523894	5060523523900	5060523524051	5060523524075
CARTON QUANTITY	8	6	4	4	4	2	2
DIMENSION DRAWING	6P	10P	14P	18P	24P	28P	36P
WEIGHT (1PC) Kg	2.3	2.8	3.2	3.8	4.8	7.8	8
DIMENSIONS (HxWxD)mm	259x162x113	259x234x113	259x306x113	259x378x113	259x486x113	512x306x113	512x378x113
DOUBLE BANK	N	N	N	N	N	Y	Y
TAIL CLAMP COMPATIBLE (ACCF)	Y	Y	Y	Y	Y	Y	Y

STANDARD	EN 61439-3
RATED VOLTAGE (Un/AC)	230V
FREQUENCY (Hz)	50/60
PROTECTION DEGREE (IP)	2XC
MAXIMUM TERMINAL BAR CAPACITY	16mm²
TERMINAL BAR TIGHTENING TORQUE (Nm)	2.0
DEVICE MOUNTING	35mm DIN RAIL
MATERIAL	1mm ELECTRO GALVANISED STEEL (ZINC)
FINISH	RAL 9001 POWDER COATED SMOOTH FINISH
KNOCKOUTS	SELECTION 20mm - 40mm
ACCESSORY PACK	CIRCUIT IDENTIFICATION LABELS / GROMMET STRIP
ORIGIN OF MANUFACTURE	CHINA

DIMENSIONS

10P

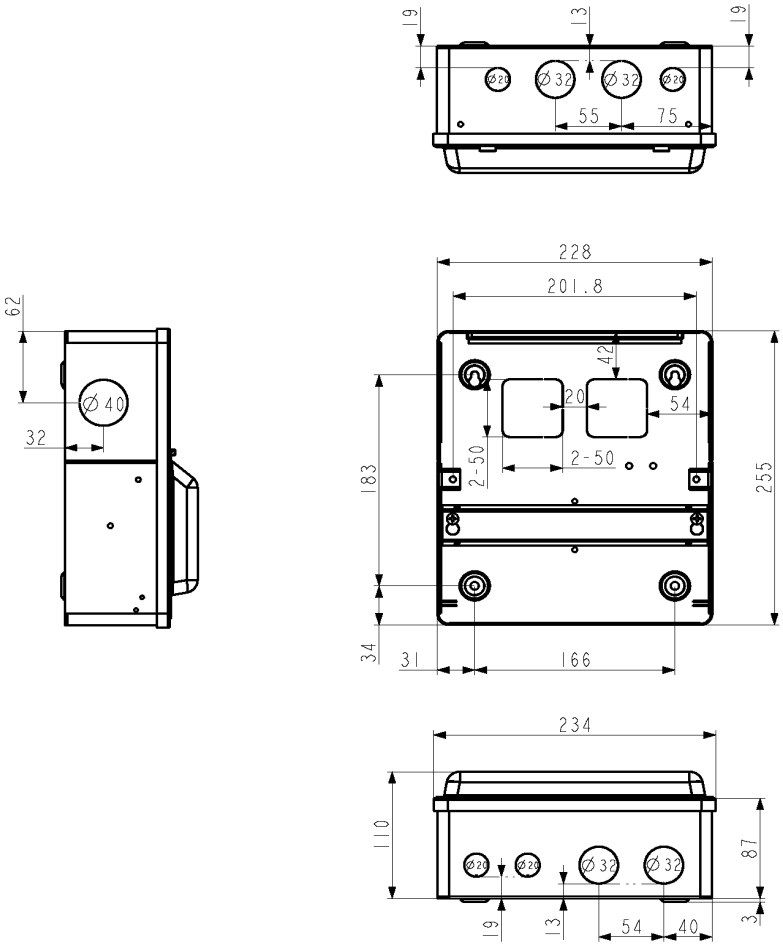

14P

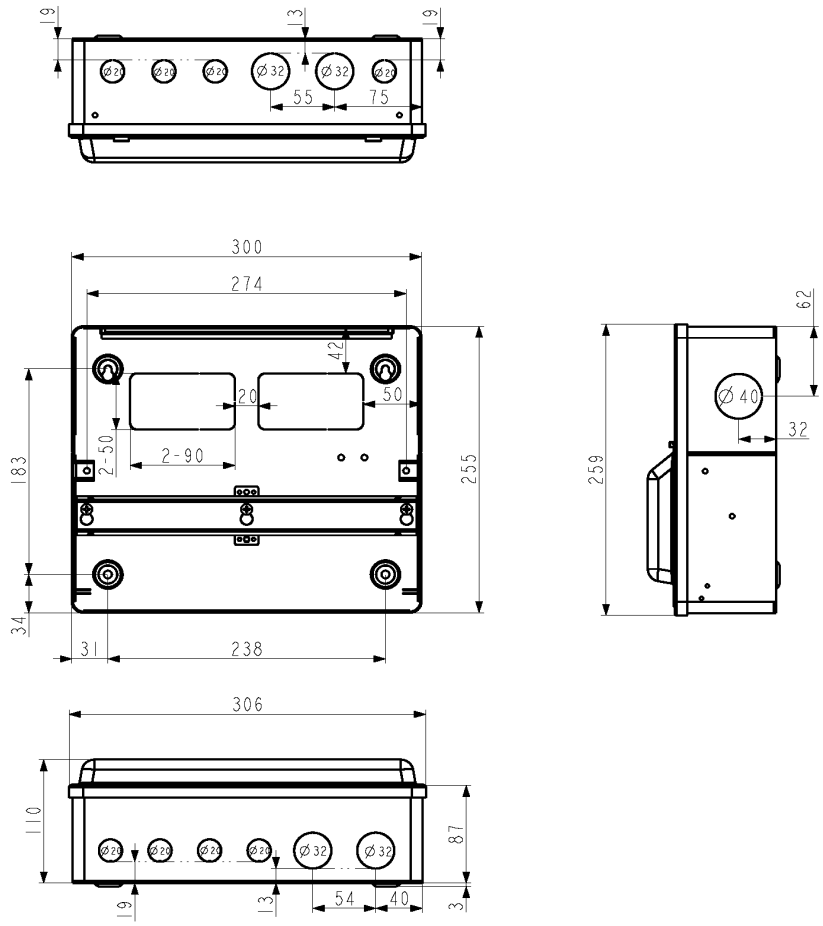

FuseBox®

18P

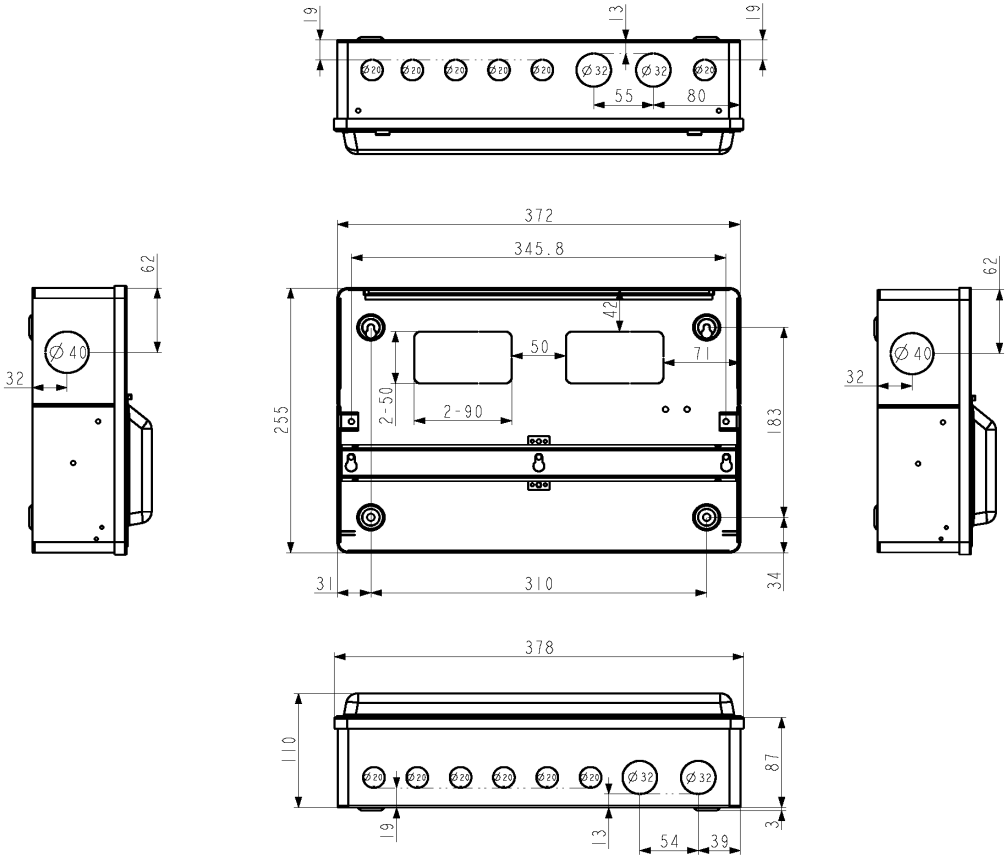

24P

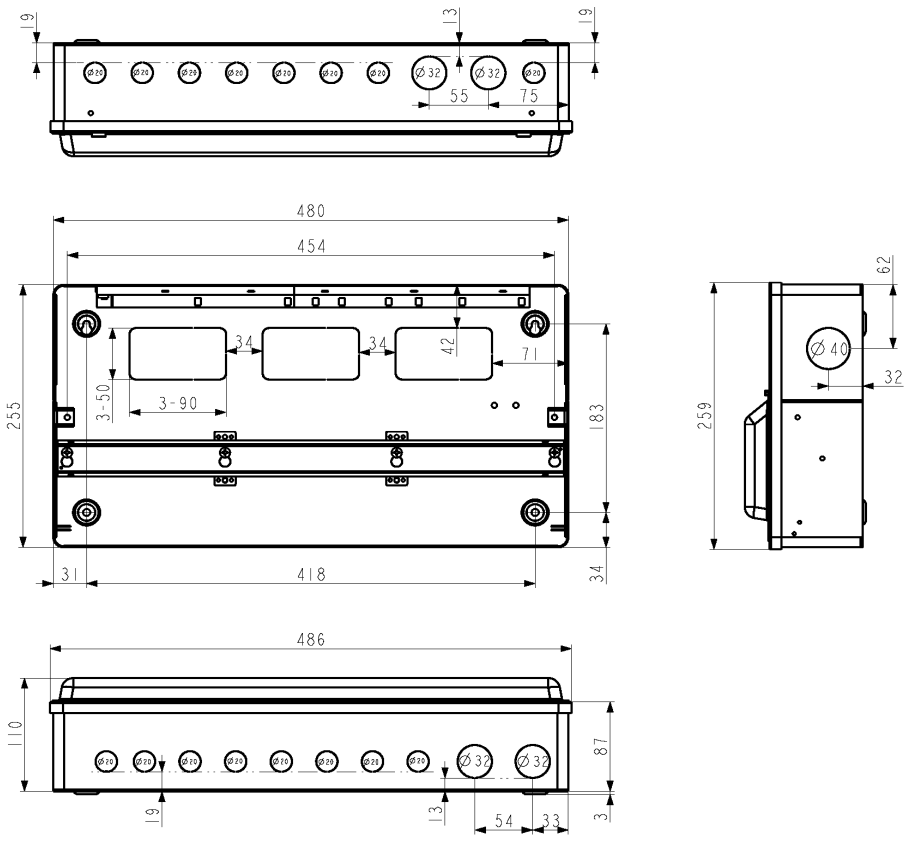

FuseBox®

28P

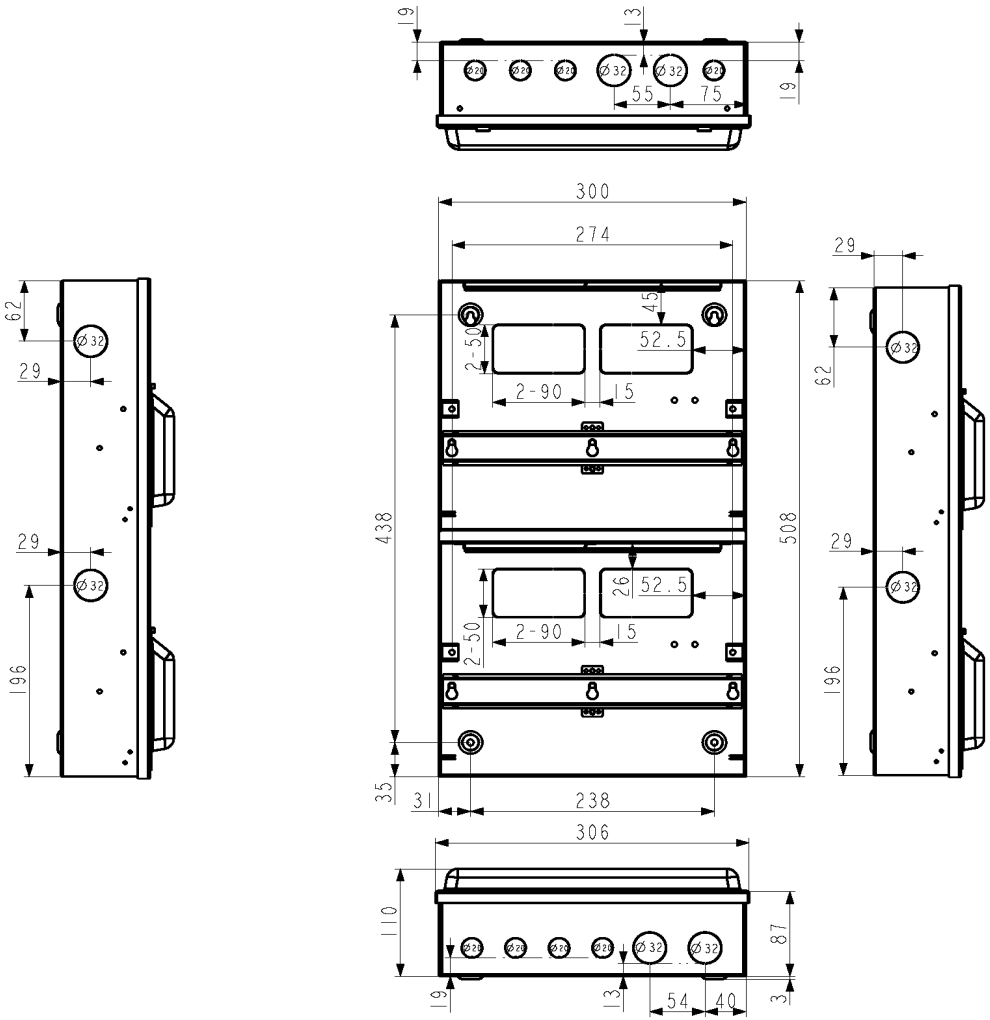

36P

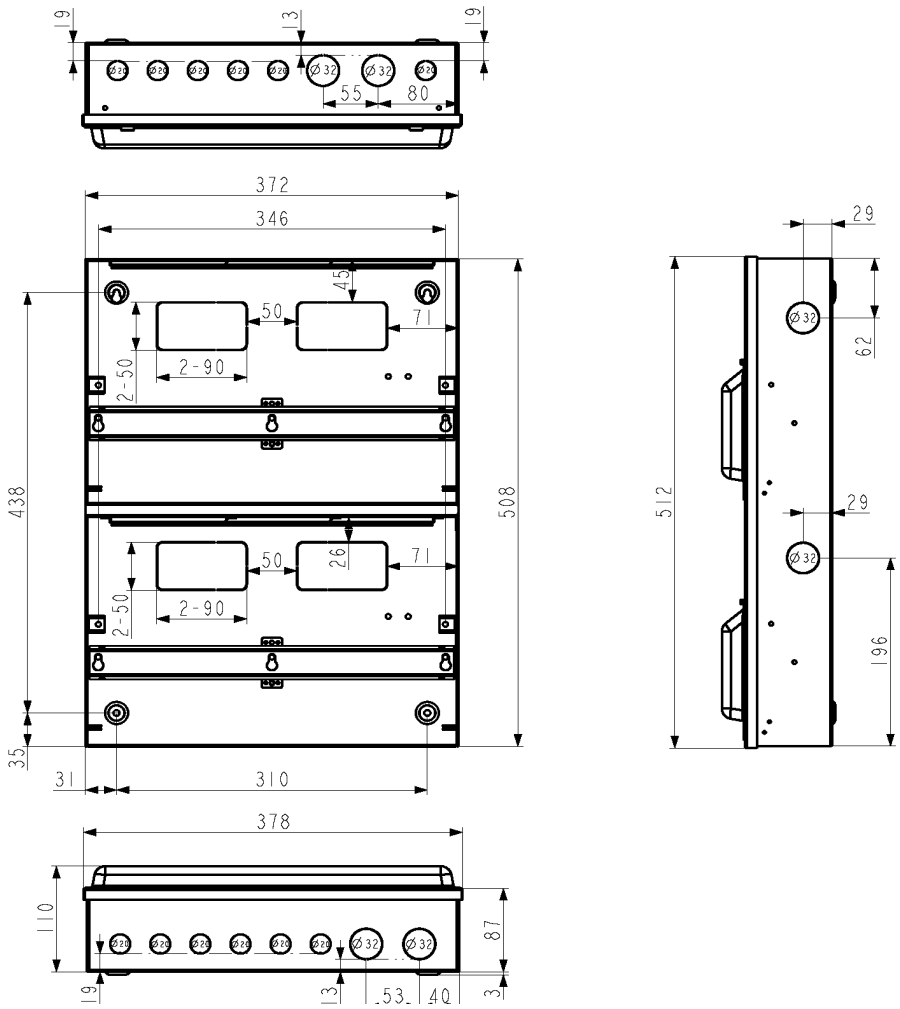

FuseBox®

www.fusebox.co.uk